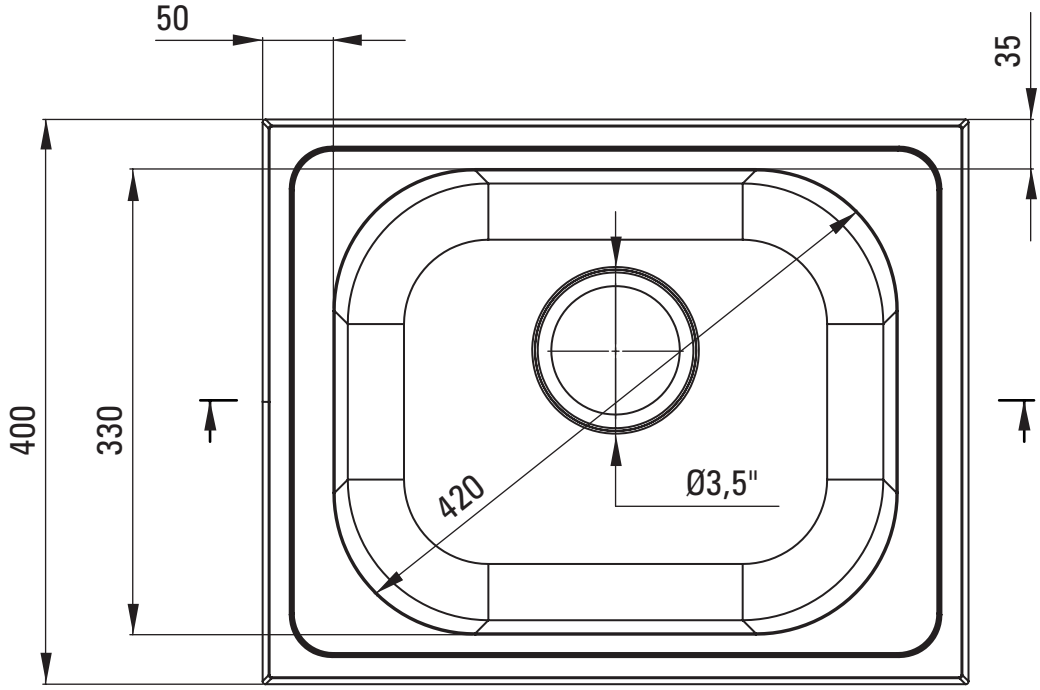
50
35
400
330
420
Ø3,5"

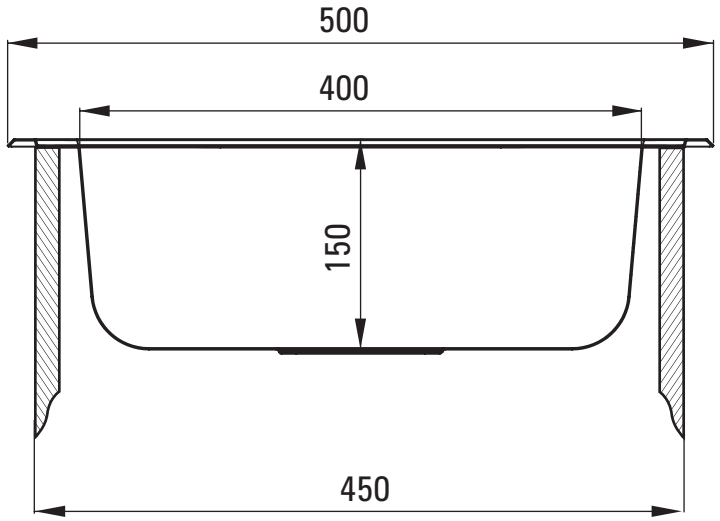
500
400
150
450