deante

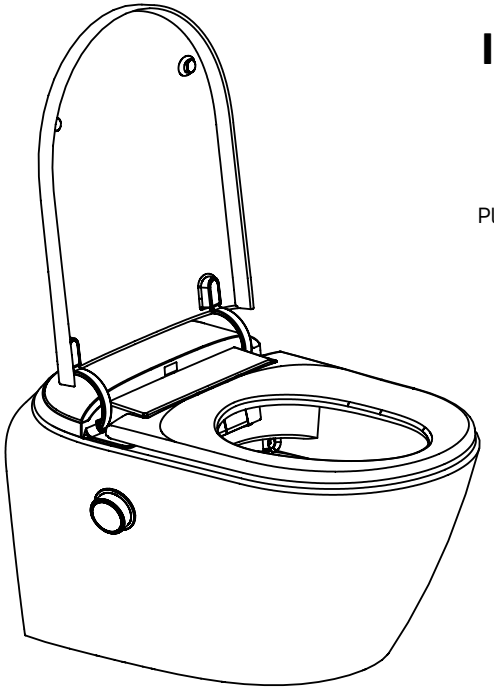

INSTRUCTION MANUAL

Please read the manual carefully, and save it for reference in the future.

Please strictly observe the precautions, and install and use it according to the instruction manual.

When the product fails, please do not continue to use it: such as the product is abnormally hot;the product emits smoke;there is abnormal sound and odor;the product has cracks or damage;the toilet is blocked, etc.; Consequences of continued use may cause electric shock, injury, fire or indoor water seepage.

- Do not use banana oil, gasoline, decontamination powder, nylon brushes and other (non-neutral) cleaning agents to clean the toilet cover, toilet seat and other plastic parts.Otherwise, chemical reactions or cracks may occur, damaging the product and causing personal injury.
- Do not use loose power sockets, which may cause electric shock or fire.
- Do not plug or unplug the power plug with wet hands, which may cause electric shock or fire.
- Do not touch the power plug when there is thunder and lightning crashing, which may cause electric shock.
- Do not use other power sources, and the load of the socket should not be too large. Otherwise, the product may cause fire due to overheating.
- Do not splash detergent, water, cleaning agent or urine on the toilet and power plug, it may cause electric shock or fire.
- Do not allow children to play with this product, and do not stand or place heavy objects on the product, and do not tap vigorously or acts such as hitting this product.
- Do not disassemble or repair this product by yourself (it must be repaired by professional maintenance personnel), otherwise it may cause damage to the product.
- Do not handle or damage the power cord plug and power cord If the power plug and power cord are damaged, they must be replaced by the manufacturer, to avoid danger its maintenance department or other professionals in similar departments . Otherwise, short circuit, electric shock, fire and other risks may be caused.
- Lighted cigarettes and other combustibles cannot be put into the toilet, and a heater should not be placed next to the product.

In the same room where this product is installed, it is necessary to install a water inlet valve angle valve switch at an accessible position for emergency situations, which can cut off the water circuit of this product without the aid of tools; otherwise, the unexpected failure of this product may cause loss of users.

SAFETY PRECAUTIONS

If the product has not been used for a long time, please close the angle valve of the water inlet valve, and use the water release button to drain the body components and cut off the power supply. When using it again, please pass the water before using the product to prevent the water in the pipeline of the product from deteriorating and causing skin diseases.

When the temperature outside is lower than 0 , please close the water inlet angle valve and empty the water in the water inlet pipe and accessories in order to prevent the water inlet pipe or external filter and other accessories from being damaged due to freezing. If the product pipe has been frozen, please raise the room temperature and wait for the ice in the pipe to melt before using it. Otherwise, the product may not be used normally.

When using this product in the bathroom, please install ventilation equipment to make the air flow in the bathroom smooth and keep the bathroom dry. This product is an electrical product, so please do not install it in a place that is prone to high humidity and is easily splashed by water, which may cause electric shock or fire.

Before cleaning this product, be sure to disconnect the power plug. Do not wash the product directly with water, otherwise it may cause electric shock or fire.

Please place the product in the shade, do not directly expose it to the sun, otherwise the product will fade or the surface of the product will be burned by the sun due to unstable temperature.

Do not use industrial water, waste water, sea water, reclaimed water and other sewage, otherwise it may cause skin inflammation and other problems.

Persons (including children) with impairments in physical, perceptual, intellectual abilities or lack of experience and common sense must use this product under the guidance or supervision of others, otherwise it may cause electric shock, personal injury or fire.

Please pay attention to the installation position of the power wiring socket. The power socket needs to be a waterproof socket or waterproof treatment. The installation position of the power socket must be more than 0.5m away from the floor, and away from the shower, bathtub and other items with water, otherwise it may cause leakage.

When installing this product, please remove the old hose assembly owned by the user, and use the new hose assembly with this product for installation. Do not reuse the old hose assembly to avoid related safety problems.

The grounding wire of this product must conform to the specified construction method, and the tertiary grounding structure must be grounded. Otherwise it is forbidden to use the product.

The power plug needs to be connected to the power supply with the air switch installed, and it must be effectively grounded before using this product.

SPECIFICATIONS

Rated voltage	220-240V~ 50-60Hz
Leakage protection cable	About 1500mm
Nominal water consumption	4.0L / 6.0L
Seat surface temperature	Room temperature - about 38°C
Soft closing method of the cover and the seat	Slow closing mechanism
	Auto sensing
	Foot sensing
Rated power	41W
Indoor temperature	3°C - 40°C
Waterproof grade	IPX4
Product size	590 x 395 x 420 mm

* Rated power: Under ambient temperature conditions of 23±2°C, when the seat temperature has stabilized to match the ambient temperature, set the seat temperature to the maximum setting, begin heating, and measure the average power over a continuous 60-second test.

PRODUCT SIZE

Unit: mm

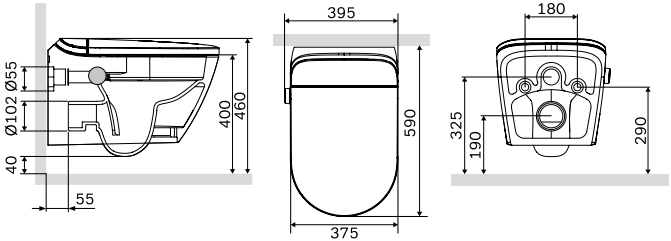

PART NAME

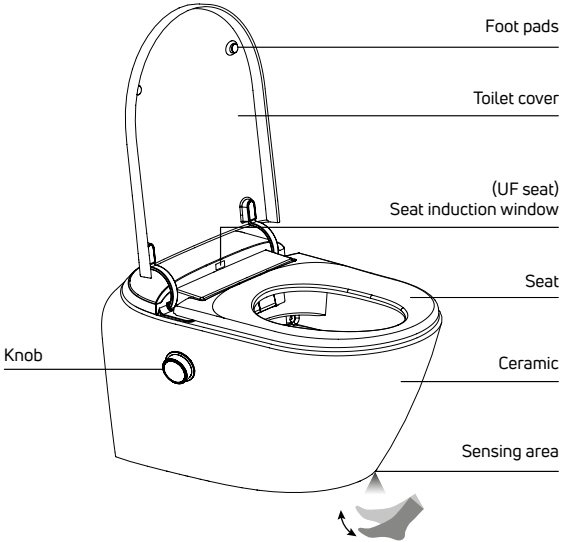

SPARE PARTS LIST

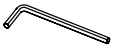
Hexagon wrench

Nylon nut x2

Expansion screw set x2

Toilet mat

Instruction manual

Screw x2

Decorative cover x2

Gasket x2

INSTALLATION TOOL

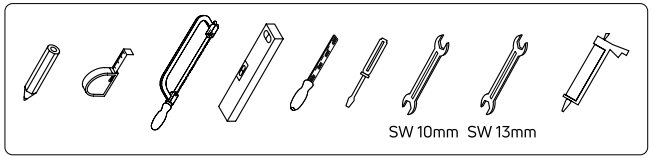

INSTALLATION INSTRUCTIONS

1. Fix the water tank frame and show the dimensions as shown in the drawing.

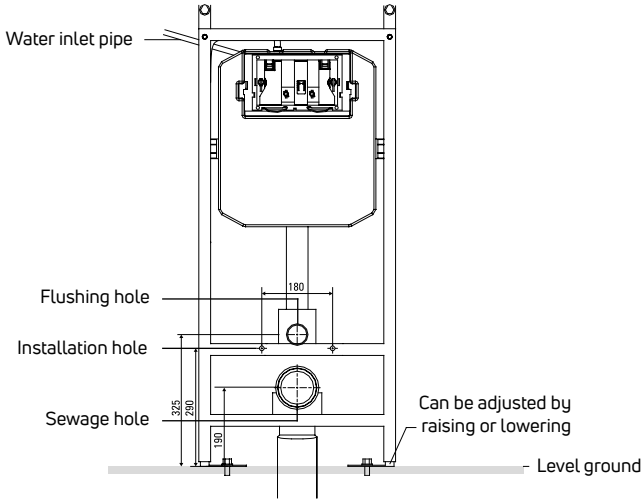

INSTALLATION INSTRUCTIONS

2. Put the toilet mat on the reserved position on the wall, direct the mounting hole of toilet mat to the fixed screw of the water tank frame, and then insert the mat, aligning with the flushing hole and sewage hole of the water tank.

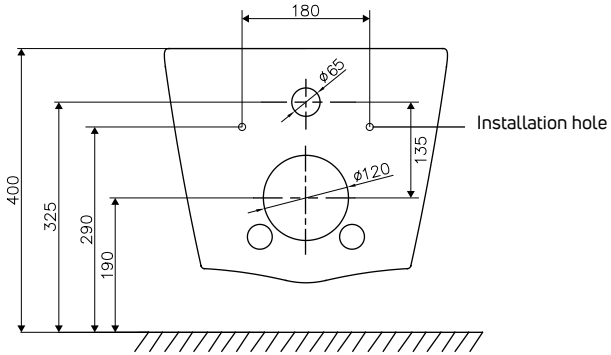

INSTALLATION INSTRUCTIONS

3. The rear of the toilet is aligned with the toilet mat, the flushing hole and sewage hole of the toilet are aligned with the corresponding position of the toilet mat. Move the toilet slowly towards the wall in the direction of the arrow until it is close to the wall.

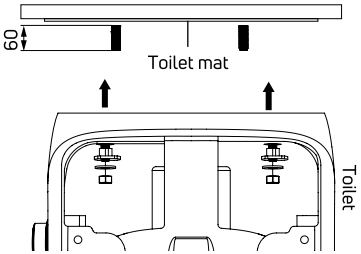

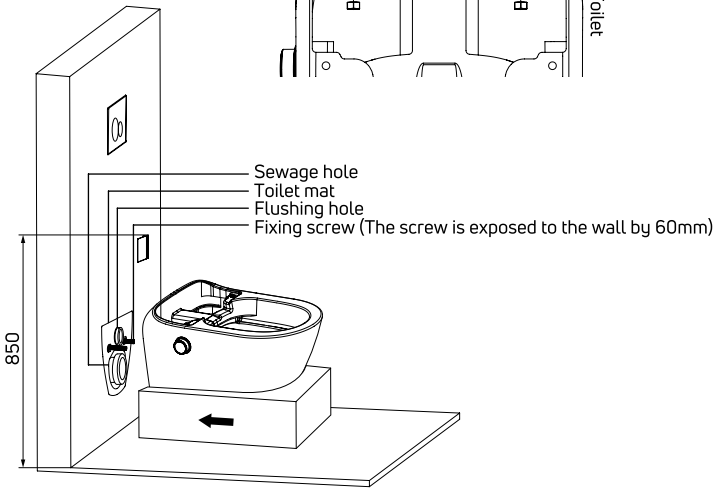

INSTALLATION INSTRUCTIONS

4. After the toilet is close to the wall, use a gradienter to measure the product to keep the product in a horizontal position. Then put a plastic plug and a stainless steel gasket on the fixed screw in turn, and then tighten the nut. Then put plastic nylon nut in the toilet fixing hole.

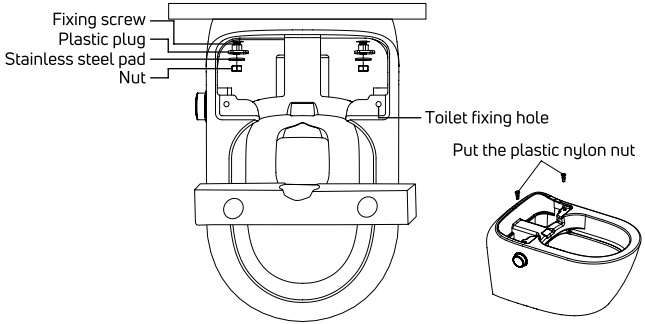

INSTALLATION INSTRUCTIONS

5. Install the power connector cable, knob cable, and microwave induction cable as shown in the figure.

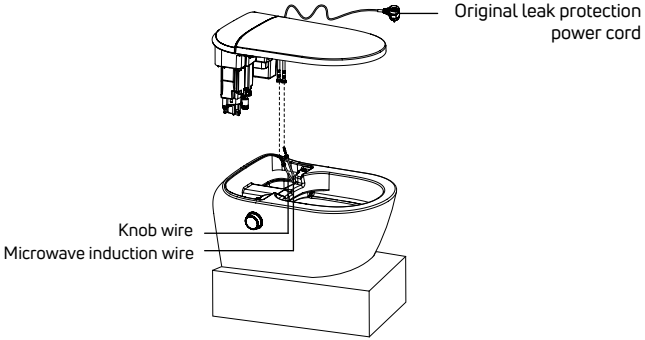

INSTALLATION INSTRUCTIONS

6. After the knob wire and microwave induction wire are connected, arrange the wires and put them into the wire clip, and then press and hold the wire clip in the direction of closing indicated by the arrow. When you need to take out the wire, press the wire clip in the direction of opening indicated by the arrow.

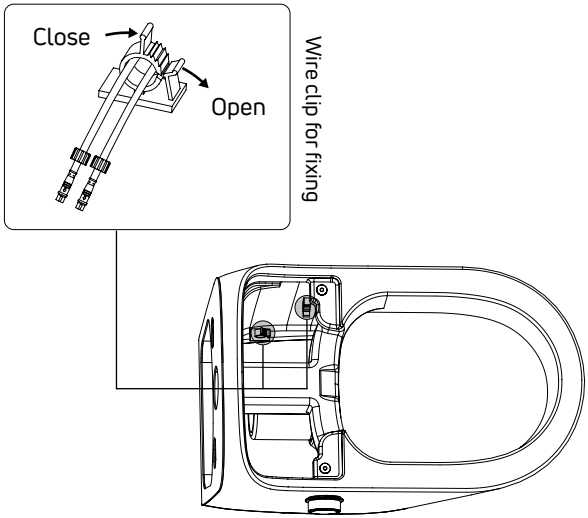

INSTALLATION INSTRUCTIONS

7. Fix the electronic seat on the top of ceramic, tighten it with the fixing screw, and install the decorative cover. after installation, take out the package in the direction of the arrow in the figure.

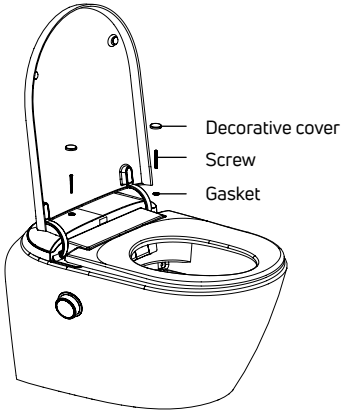

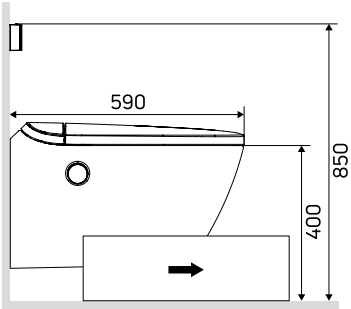

DESCRIPTION OF KNOB FUNCTION

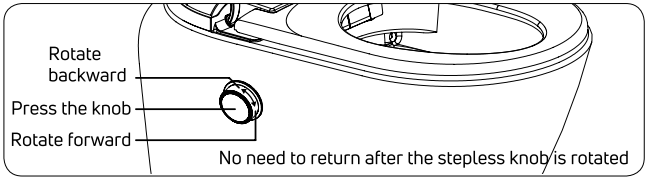

In the seated state (The light is always bright white):
Rotate the knob forward—each notch turn increases the seat temperature by one level; rotate the knob backward—each notch turn decreases the seat temperature by one level. The seat offers 4 adjustable temperature levels, with „Off" being one level.

DESCRIPTION OF OTHER FUNCTIONS

Automatic opening or closing of lid/seat:
When people close to the ceramic induction area, the lid automatically open.
When the lid is opened and the seat is closed, wave it back and forth in the ceramic sensing area once, and the seat will open. Without any operation and when not seated, approximately 120 seconds after a person leaves, the cover and seat ring will automatically close in sequence. The cover and seat ring can only be used again about 5 seconds after closing to use the sensor flip function.

Foot kick automatic sensing:
When the lid and seat ring are open, kicking or touching the foot sensor will cause the lid and seat ring to close automatically When the lid and seat ring are closed, kicking or touching the foot sensor will cause the lid to open automatically; When the lid is open and the seat ring is closed, kicking or touching the foot sensor will cause the seat ring to open automatically.

Low-Temperature Anti-Scalding:
After sitting, the seat heats up to the set temperature and maintains it for about 1.5 minutes, then activates the low-temperature anti-scalding function, reducing the seat temperature to a low setting of approximately 32°C.

TROUBLESHOOTING AND ALARM REPAIR

Abnormal heating temperature of the seat : the red light on the knob flashes 5 times.

FREE MAINTENANCE REGULATIONS

1. When you use the the product according to the instruction manual and precautions and the failure occurs within the warranty period, free maintenance will be offered.
2. If there is a failure during the warranty period and free maintenance is required, please contact the dealer or the relevant unit of the company.
3. Although within the warranty period, paid maintenance is required in the following situations:

- Due to improper operation during use, machine failure and improper repair or modification due to misuse or failure or damage caused by reinstallation;
- Failure and damage caused by forced movement after the product is installed;
- Failure or damage caused by natural disasters (earthquakes, fires, floods, lightning strikes and other natural disasters) or corrosive liquids or abnormal voltages;
- Failure or damage result from other purposes (non-home use);
- Failure to provide maintenance service orders;
- The maintenance service list has no detailed records or the records have been modified by users.

Due to the continuous improvement of the company's products, the company reserves the right of final interpretation of product changes.

Some features of the product you purchased may not be completely consistent with this manual, and the actual product shall prevail.

Implementation standard: EN 60335-1 EN 60335-2-84